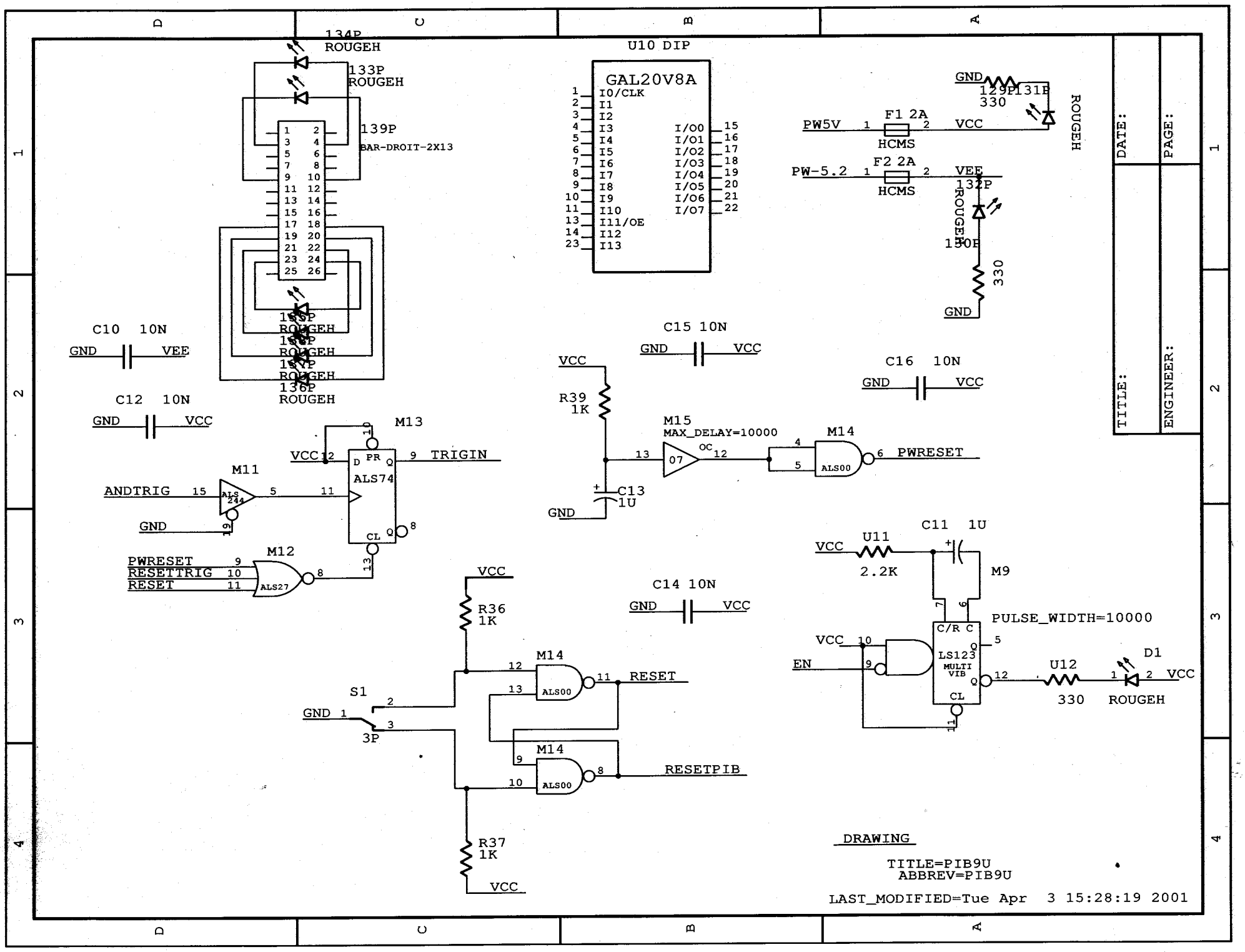
134P
ROUGEH
133P
ROUGEH
139P
BAR-DROIT-2X13
135P
ROUGEH
137P
ROUGEH
138P
ROUGEH
136P
ROUGEH
U10 DIP
GAL20V8A
I0/CLK
I1
I2
I3
I4
I5
I6
I7
I8
I9
I10
I11/OE
I12
I13
I/O0
I/O1
I/O2
I/O3
I/O4
I/O5
I/O6
I/O7
GND
129P
330
131P
ROUGEH
PW5V
F1 2A
HCMS
VCC
PW-5.2
F2 2A
HCMS
VEE
132P
ROUGEH
130P
330
GND
C10 10N
GND
VEE
C12 10N
GND
VCC
C15 10N
GND
VCC
C16 10N
GND
VCC
VCC
R39
1K
C13
1U
GND
M15
MAX_DELAY=10000
07
OC
M14
ALS00
PWRESET
M13
ALS74
D
PR
Q
CL
TRIGIN
VCC
M11
ALS 244
ANDTRIG
GND
M12
ALS27
PWRESET
RESETTRIG
RESET
VCC
R36
1K
C14 10N
GND
VCC
M14
ALS00
RESET
S1
GND
3P
M14
ALS00
RESETPIB
R37
1K
VCC
VCC
U11
2.2K
C11 1U
M9
PULSE_WIDTH=10000
C/R C
LS123
MULTI VIB
CL
VCC
EN
U12
330
D1
ROUGEH
VCC
DRAWING
TITLE=PIB9U
ABBREV=PIB9U
LAST_MODIFIED=Tue Apr 3 15:28:19 2001
DATE:
PAGE:
TITLE:
ENGINEER: